Si-MMIC-Amplifier in SIEGET 25-Technologie

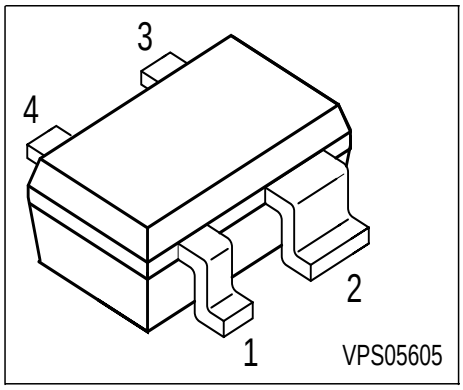

- Cascadable 50 Ω-gain block
- Unconditionally stable
- Gain $|S_{21}|^2$ = 18.5 dB at 1.8 GHz (Appl.1)
  gain $|S_{21}|^2$ = 22 dB at 1.8 GHz (Appl.2)
  IP_{3out} = +7 dBm at 1.8 GHz (V_D=3V, I_D=9.4mA)
- Noise figure *NF* = 2.2 dB at 1.8 GHz
- Typical device voltage V_D = 2 V to 5 V
- Reverse isolation > 35 dB (Appl.2)

Circuit Diagram

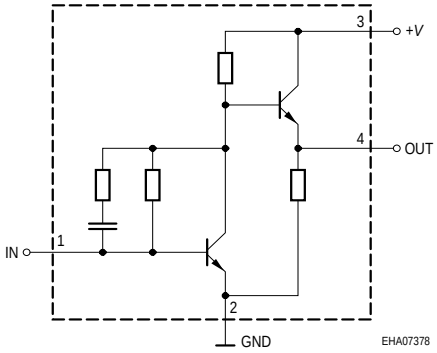

ESD: **E**lectro**s**tatic **d**ischarge sensitive device, observe handling precaution!

Type	Marking	Pin Configuration				Package
BGA427	BMs	1, IN	2, GND	3, +V	4, Out	SOT343

Maximum Ratings

Parameter	Symbol	Value	Unit
Device current	I_D	25	mA
Device voltage	V_D,+V	6	V
Total power dissipation T_S = 120 °C	P_{tot}	150	mW
RF input power	P_{RFin}	-10	dBm
Junction temperature	T_j	150	°C
Ambient temperature range	T_A	-65 ... 150	
Storage temperature range	T_{stg}	-65 ... 150	

Thermal Resistance

Junction - soldering point[1)]	R_{thJS}	≤ 295	K/W

[1]For calculation of R_{thJA} please refer to Application Note Thermal Resistance

Electrical Characteristics at T_A = 25 °C, unless otherwise specified.

Parameter	Symbol	Values			Unit
		min.	typ.	max.	
AC characteristics V_D = 3 V, Z_0 = 50Ω, Testfixture Appl.1					
Insertion power gain	$\|S_{21}\|^2$				dB
f = 0.1 GHz		-	27	-	
f = 1 GHz		-	22	-	
f = 1.8 GHz		-	18.5	-	
Reverse isolation f = 1.8 GHz	S12	-	22	-	
Noise figure	NF				
f = 0.1 GHz		-	1.9	-	
f = 1 GHz		-	2	-	
f = 1.8 GHz		-	2.2	-	
Intercept point at the output f = 1.8 GHz	IP_{3out}	-	+ 7	-	dBm
Return loss input f = 1.8 GHz	RL_{in}	-	>12	-	dB
Return loss output f = 1.8 GHz	RL_{out}	-	>9	-	

Typical configuration

Appl.1

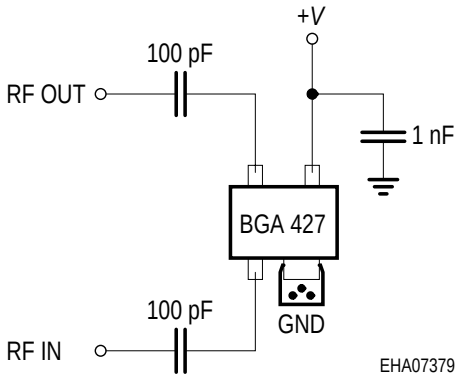

Appl.2

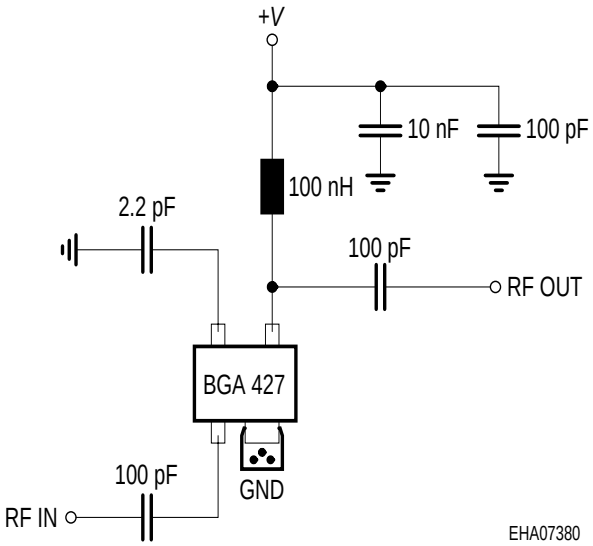

Note: 1) Large-value capacitors should be connected from pin 3 to ground right at the device to provide a low impedance path (appl.1).
2) The use of plated through holes right at pin 2 is essential for pc-board-applications. Thin boards are recommended to minimize the parasitic inductance to ground.

S-Parameters at T_A = 25 °C, (Testfixture, Appl.1)

f	S_{11}		S_{21}		S_{12}		S_{22}	
GHz	MAG	ANG	MAG	ANG	MAG	ANG	MAG	ANG
V_D = 3V, Z_0 = 50Ω								
0.1	0.1382	-38.3	24.821	164.9	0.0022	50.7	0.6435	174.8
0.2	0.1179	-16	24.606	158.9	0.0046	71.8	0.6278	166.9
0.5	0.1697	-20.8	22.236	135.2	0.0104	83.8	0.54	147.3
0.8	0.1824	-56.9	18.258	115.4	0.0169	94.8	0.4453	140.2
0.9	0.1782	-69.1	17.152	109.4	0.0194	97.3	0.4326	139.4
1	0.176	-80.6	15.786	104	0.0225	98.3	0.4129	138.1
1.5	0.1827	-133.5	10.923	84.9	0.0385	99.7	0.3852	139.6
1.8	0.1969	-156.1	9.029	77	0.0479	99.3	0.3917	139.3
1.9	0.2021	-162.8	8.486	74.7	0.0517	98.9	0.3946	138.8
2	0.2116	-167.7	8.015	72.3	0.0549	98.8	0.3991	138.3
2.5	0.2437	172.8	6.259	63	0.0709	97.1	0.4202	134.6
3	0.258	153.3	5.103	55	0.0892	96.9	0.4477	131

Spice-model BGA 427

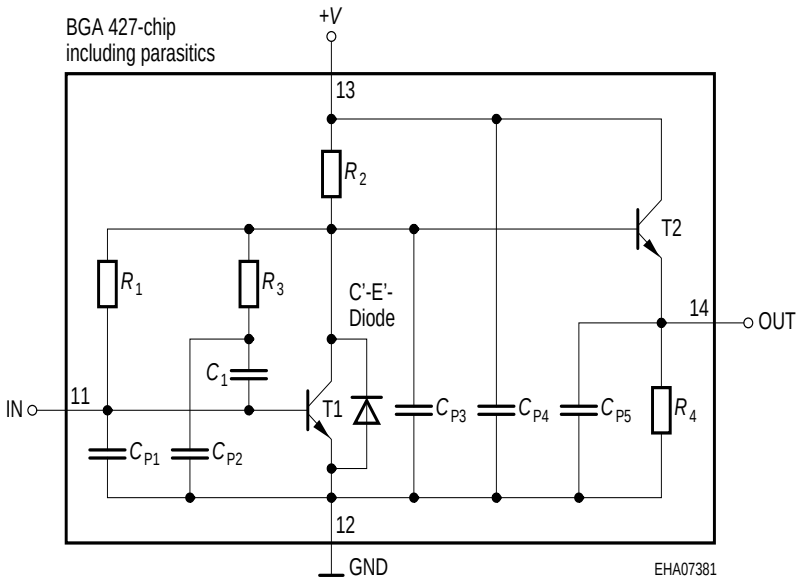

T1	T501
T2	T501
R_1	14.5kΩ
R_2	280Ω
R_3	2.4kΩ
R_4	170Ω
C_1	2.3pF
C_{P1}	0.2pF
C_{P2}	0.2pF
C_{P3}	0.6pF
C_{P4}	0.1pF
C_{P5}	0.1pF
C'-E'-diode	T1

Transistor Chip Data T1 (Berkley-SPICE 2G.6 Syntax) :

IS =	0.21024	fA	BF =	83.23	-	NF =	1.0405	-
VAF =	39.251	V	IKF =	0.16493	A	ISE =	15.761	fA
NE =	1.7763	-	BR =	10.526	-	NR =	0.96647	-
VAR =	34.368	V	IKR =	0.25052	A	ISC =	0.037223	fA
NC =	1.3152	-	RB =	15	Ω	IRB =	0.21215	A
RBM =	1.3491	Ω	RE =	1.9289		RC =	0.12691	Ω
CJE =	3.7265	fF	VJE =	0.70367	V	MJE =	0.37747	-
TF =	4.5899	ps	XTF =	0.3641	-	VTF =	0.19762	V
ITF =	1.3364	mA	PTF =	0	deg	CJC =	96.941	fF
VJC =	0.99532	V	MJC =	0.48652	-	XCJC =	0.08161	-
TR =	1.4935	ns	CJS =	0	fF	VJS =	0.75	V
MJS =	0	-	XTB =	0	-	EG =	1.11	eV
XTI =	3	-	FC =	0.99469	-	TNOM	300	K

C'-E'-Diode Data (Berkley-SPICE 2G.6 Syntax) :

IS =	2	fA	N =	1.02	-	RS =	20	Ω

All parameters are ready to use, no scaling is necessary

Package Equivalent Circuit:

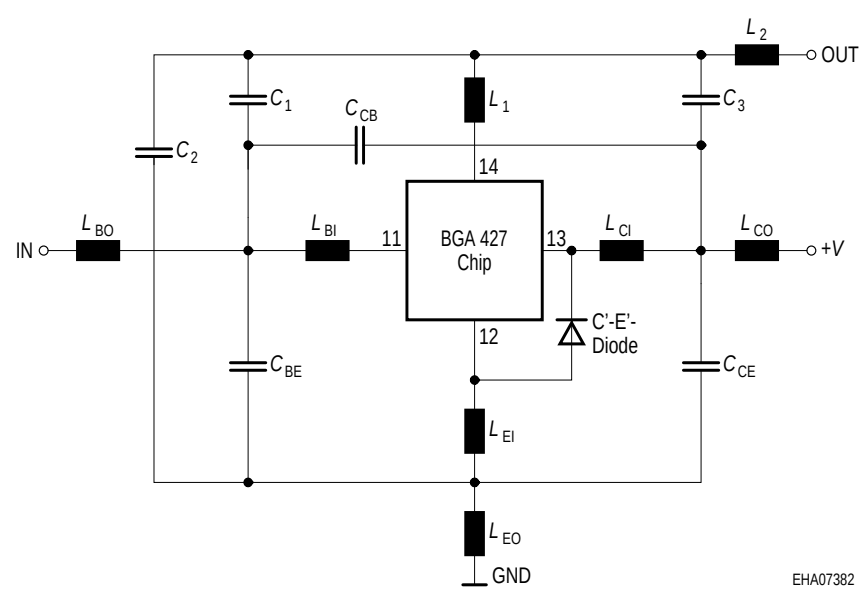

L_{BI} =	0.36	nH
L_{BO} =	0.4	nH
L_{EI} =	0.3	nH
L_{EO} =	0.15	nH
L_{CI} =	0.36	nH
L_{CO} =	0.4	nH
C_{BE} =	95	fF
C_{CB} =	6	fF
C_{CE} =	132	fF
C_1 =	28	fF
C_2 =	88	fF
C_3 =	8	fF
L_1 =	0.6	nH
L_2 =	0.4	nH

Valid up to 3GHz

Extracted on behalf of Infineon Technologies AG by:
Institut für Mobil-und Satellitentechnik (IMST)

For examples and ready to use parameters please contact your local Infineon Technologies distributor or sales office to obtain a Infineon Technologies CD-ROM or see Internet:
http://www.infineon.com/silicondiscretes

Insertion power gain $|S_{21}|^2 = f(f)$

V_D, I_D = parameter

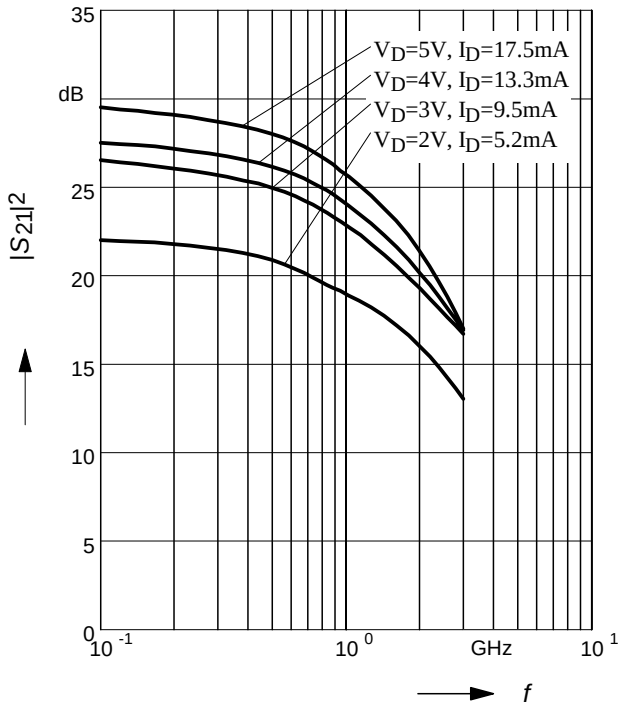

Noise figure $NF = f(f)$

V_D,I_D = parameter

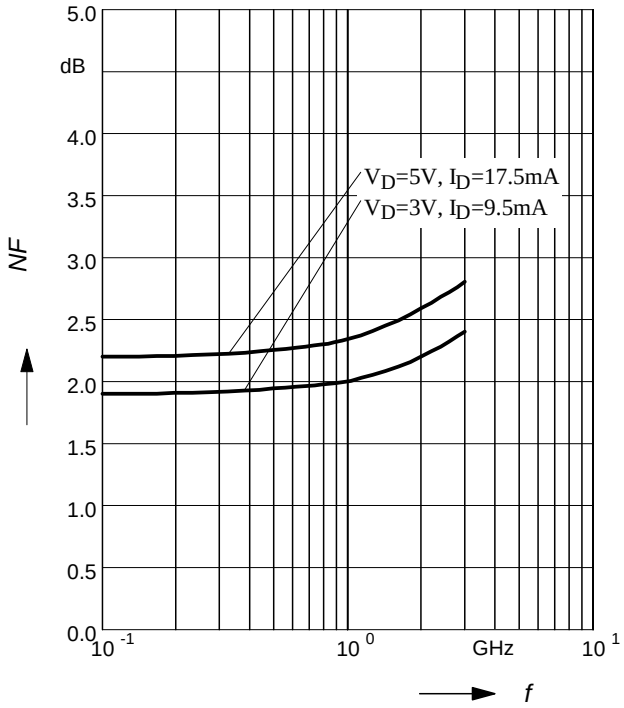

Intercept point at the output

$IP_{3out} = f(f)$

V_D,I_D = parameter

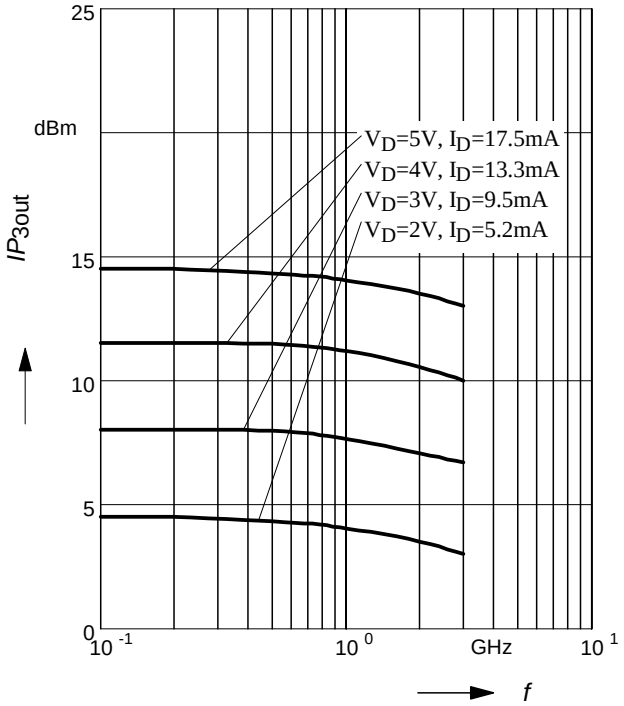

This datasheet has been download from:

www.datasheetcatalog.com

Datasheets for electronics components.