- **Supports Mixed-Mode Signal Operation (5-V Input and Output Voltages With 3.3-V V_{CC})**
- **Typical V_{OLP} (Output Ground Bounce) <0.8 V at V_{CC} = 3.3 V, T_A = 25°C**
- **Supports Unregulated Battery Operation Down to 2.7 V**
- **Bus Hold on Data Inputs Eliminates the Need for External Pullup/Pulldown Resistors**
- **Reduced Output Structure on A Port Minimizes V_{OHV}**
- **Latch-Up Performance Exceeds 500 mA Per JESD 17**

NS PACKAGE
(TOP VIEW)

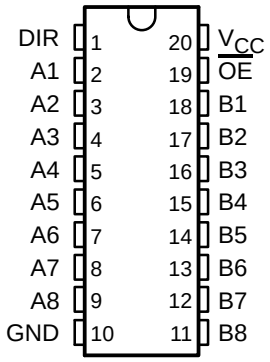

description/ordering information

This octal bus transceiver is designed specifically for low-voltage (3.3-V) V_{CC} operation, but with the capability to provide a TTL interface to a 5-V system environment.

The SN74LVTR245 is designed for asynchronous communication between data buses. The device transmits data from the A bus to the B bus or from the B bus to the A bus, depending on the logic level at the direction-control (DIR) input. The output-enable ($\overline{OE}$) input can be used to disable the device so the buses are effectively isolated.

Active bus-hold circuitry holds unused or undriven inputs at a valid logic state. Use of pullup or pulldown resistors with the bus-hold circuitry is not recommended.

The A port is designed to minimize the undershoot exhibited on high-to-low transitions during simultaneous switching conditions.

ORDERING INFORMATION

T_A	PACKAGE†		ORDERABLE PART NUMBER	TOP-SIDE MARKING
–40°C to 85°C	SOP – NS	Tape and reel	SN74LVTR245NSR	LVTR245

† Package drawings, standard packing quantities, thermal data, symbolization, and PCB design guidelines are available at www.ti.com/sc/package.

Please be aware that an important notice concerning availability, standard warranty, and use in critical applications of Texas Instruments semiconductor products and disclaimers thereto appears at the end of this data sheet.

PRODUCTION DATA information is current as of publication date. Products conform to specifications per the terms of Texas Instruments standard warranty. Production processing does not necessarily include testing of all parameters.

Copyright © 2002, Texas Instruments Incorporated

FUNCTION TABLE

INPUTS		OPERATION
$\overline{OE}$	DIR	
L	L	B data to A bus
L	H	A data to B bus
H	X	Isolation

logic diagram (positive logic)

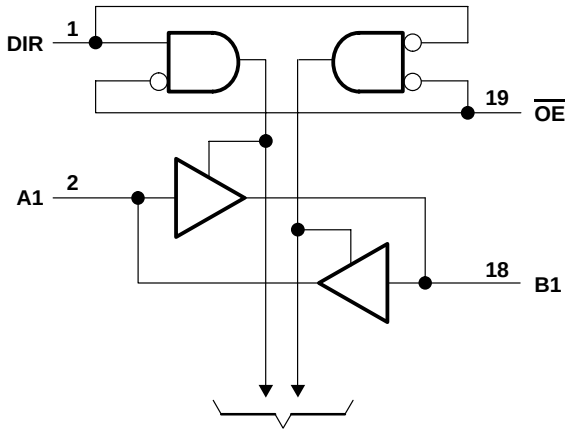

absolute maximum ratings over operating free-air temperature range (unless otherwise noted)†

Supply voltage range, V_{CC} . . . . . –0.5 V to 4.6 V
Input voltage range, V_I (see Note 1) . . . . . –0.5 V to 7 V
Voltage range applied to any output in the high state or power-off state, V_O (see Note 1) . . . . –0.5 V to 7 V
Current into any output in the low state, I_O . . . . . 128 mA
Current into any output in the high state, I_O (see Note 2) . . . . . 64 mA
Input clamp current, I_{IK} (V_I < 0) . . . . . –50 mA
Output clamp current, I_{OK} (V_O < 0) . . . . . –50 mA
Package thermal impedance, θ_{JA} (see Note 3) . . . . . 60°C/W
Storage temperature range, T_{stg} . . . . . –65°C to 150°C

† Stresses beyond those listed under “absolute maximum ratings” may cause permanent damage to the device. These are stress ratings only, and functional operation of the device at these or any other conditions beyond those indicated under “recommended operating conditions” is not implied. Exposure to absolute-maximum-rated conditions for extended periods may affect device reliability.

NOTES: 1. The input and output negative-voltage ratings may be exceeded if the input and output clamp-current ratings are observed.
2. This current flows only when the output is in the high state and $V_O > V_{CC}$.
3. The package thermal impedance is calculated in accordance with JESD 51-7.

recommended operating conditions

			MIN	MAX	UNIT
V_{CC}	Supply voltage		2.7	3.6	V
V_{IH}	High-level input voltage		2		V
V_{IL}	Low-level input voltage			0.8	V
V_I	Input voltage			5.5	V
I_{OH}	High-level output current	B port		–32	mA
		A port		–12	
I_{OL}	Low-level output current			32	mA
I_{OL}†	Low-level output current			64	mA
$\Delta t/\Delta v$	Input transition rise or fall rate	Outputs enabled		10	ns/V
T_A	Operating free-air temperature		–40	85	°C

† Current duty cycle ≤50%, f ≥ 1 kHz

electrical characteristics over recommended operating free-air temperature range (unlessotherwise noted)

PARAMETER	TEST CONDITIONS			MIN	TYP†	MAX	UNIT
V_{IK}	V_{CC} = 2.7 V,	I_I = –18 mA				–1.2	V
V_{OH}	V_{CC} = MIN to MAX‡,	I_{OH} = –100 µA	B port	V_{CC}–0.2			V
	V_{CC} = 2.7 V,	I_{OH} = –8 mA	B port	2.4			
	V_{CC} = 3 V,	I_{OH} = –32 mA	B port	2			
	V_{CC} = MIN to MAX‡,	I_{OH} = –100 µA	A port	V_{CC}–0.2			
	V_{CC} = 2.7 V,	I_{OH} = –1 mA	A port	2.4			
	V_{CC} = 3 V	I_{OH} = –3 mA	A port	2.4			
		I_{OH} = –12 mA	A port	2			
V_{OL}	V_{CC} = 2.7 V	I_{OL} = 100 µA				0.2	V
		I_{OL} = 24 mA				0.5	
	V_{CC} = 3 V	I_{OL} = 16 mA				0.4	
		I_{OL} = 32 mA				0.5	
		I_{OL} = 64 mA				0.55	
I_I	V_{CC} = 3.6 V,	V_I = V_{CC} or GND	Control pins			±1	µA
	V_{CC} = 0 or MAX‡,	V_I = 5.5 V	Control pins			10	
	V_{CC} = 3.6 V	V_I = 5.5 V	A or B ports§			20	
		V_I = V_{CC}	A or B ports§			5	
		V_I = 0	A or B ports§			–5	
$I_{I(hold)}$	V_{CC} = 3 V	V_I = 0.8 V	A or B ports	75			µA
		V_I = 2 V	A or B ports	–75			
I_{OZH}	V_{CC} = 3.6 V,	V_O = 3 V				1	µA
I_{OZL}	V_{CC} = 3.6 V,	V_O = 0.5 V				–1	µA
I_{CC}	V_{CC} = 3.6 V V_I = V_{CC} or GND	I_O = 0,	Outputs high		0.13	0.19	mA
			Outputs low		8.8	12	
			Outputs disabled		0.13	0.19	
ΔI_{CC}¶	V_{CC} = 3 V to 3.6 V,	One input at V_{CC} – 0.6 V,	Other inputs at V_{CC} or GND			0.2	mA
C_i	V_I = 3 V or 0				4		pF
C_{io}	V_O = 3 V or 0				10		pF

† All typical values are at V_{CC} = 3.3 V, T_A = 25°C.
‡ For conditions shown as MIN or MAX, use the appropriate value specified under recommended operating conditions.
§ Unused pins at V_{CC} or GND
¶ This is the increase in supply current for each input that is at the specified TTL voltage level rather than V_{CC} or GND.

switching characteristics, C_L = 50 pF (unless otherwise noted) (see Figure 1)

PARAMETER	FROM (INPUT)	TO (OUTPUT)	V_{CC} = 3.3 V ± 0.3 V			V_{CC} = 2.7 V		UNIT
			MIN	TYP†	MAX	MIN	MAX	
t_{PLH}	A	B	1.1	2.5	4.2		4.7	ns
	B	A	1.4	2.7	4.4		5.3	
t_{PHL}	A	B	1.1	2.6	4.6		5.8	ns
	B	A	1	2.3	4.1		5.1	
t_{PZH}	$\overline{OE}$	B	1.3	3.1	5.5		6.7	ns
		A	1.6	3.6	6		8.3	
t_{PZL}	$\overline{OE}$	B	2	3.9	6.6		8	ns
		A	1.8	3.8	6.4		7.6	
t_{PHZ}	$\overline{OE}$	B	2.7	4.2	6.1		6.7	ns
		A	2.5	4	5.8		6.4	
t_{PLZ}	$\overline{OE}$	B	2.4	3.7	5.2		5.4	ns
		A	2.4	3.7	5.2		5.3	

† All typical values are at V_{CC} = 3.3 V, T_A = 25°C.

PARAMETER MEASUREMENT INFORMATION

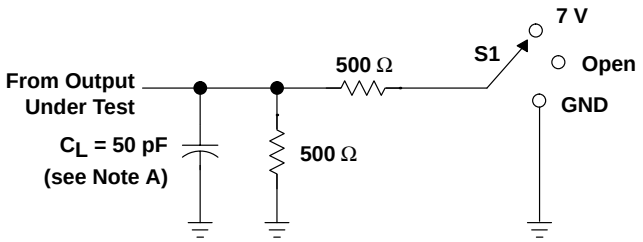

TEST	S1
t_{PLH}/t_{PHL}	Open
t_{PLZ}/t_{PZL}	7 V
t_{PHZ}/t_{PZH}	GND

LOAD CIRCUIT FOR OUTPUTS

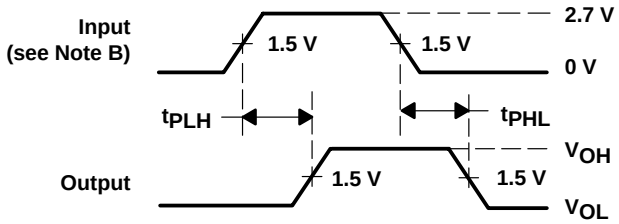

VOLTAGE WAVEFORMS
PROPAGATION DELAY TIMES

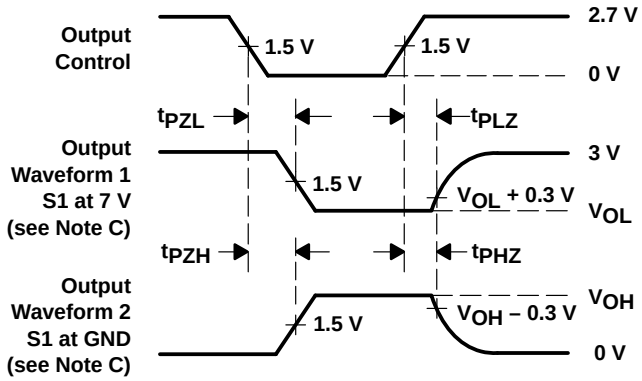

VOLTAGE WAVEFORMS
ENABLE AND DISABLE TIMES
LOW- AND HIGH-LEVEL ENABLING

NOTES: A. C_L includes probe and jig capacitance.
B. All input pulses are supplied by generators having the following characteristics: PRR ≤ 10 MHz, Z_O = 50 Ω, t_r ≤ 2.5 ns, t_f ≤ 2.5 ns.
C. Waveform 1 is for an output with internal conditions such that the output is low except when disabled by the output control. Waveform 2 is for an output with internal conditions such that the output is high except when disabled by the output control.
D. The outputs are measured one at a time with one transition per measurement.
E. All parameters and waveforms are not applicable to all devices.

Figure 1. Load Circuit and Voltage Waveforms

PACKAGING INFORMATION

Orderable Device	Status (1)	Package Type	Package Drawing	Pins	Package Qty	Eco Plan (2)	Lead/Ball Finish	MSL Peak Temp (3)
SN74LVTR245NSR	OBSOLETE	SO	NS	20		None	Call TI	Call TI
SN74LVTR245PW	OBSOLETE	TSSOP	PW	20		None	Call TI	Call TI
SN74LVTR245PWR	OBSOLETE	TSSOP	PW	20		None	Call TI	Call TI

(1) The marketing status values are defined as follows:
ACTIVE: Product device recommended for new designs.
LIFEBUY: TI has announced that the device will be discontinued, and a lifetime-buy period is in effect.
NRND: Not recommended for new designs. Device is in production to support existing customers, but TI does not recommend using this part in a new design.
PREVIEW: Device has been announced but is not in production. Samples may or may not be available.
OBSOLETE: TI has discontinued the production of the device.

(2) Eco Plan - May not be currently available - please check http://www.ti.com/productcontent for the latest availability information and additional product content details.
None: Not yet available Lead (Pb-Free).
Pb-Free (RoHS): TI's terms "Lead-Free" or "Pb-Free" mean semiconductor products that are compatible with the current RoHS requirements for all 6 substances, including the requirement that lead not exceed 0.1% by weight in homogeneous materials. Where designed to be soldered at high temperatures, TI Pb-Free products are suitable for use in specified lead-free processes.
Green (RoHS & no Sb/Br): TI defines "Green" to mean "Pb-Free" and in addition, uses package materials that do not contain halogens, including bromine (Br) or antimony (Sb) above 0.1% of total product weight.

(3) MSL, Peak Temp. -- The Moisture Sensitivity Level rating according to the JEDECindustry standard classifications, and peak solder temperature.

Important Information and Disclaimer: The information provided on this page represents TI's knowledge and belief as of the date that it is provided. TI bases its knowledge and belief on information provided by third parties, and makes no representation or warranty as to the accuracy of such information. Efforts are underway to better integrate information from third parties. TI has taken and continues to take reasonable steps to provide representative and accurate information but may not have conducted destructive testing or chemical analysis on incoming materials and chemicals. TI and TI suppliers consider certain information to be proprietary, and thus CAS numbers and other limited information may not be available for release.

In no event shall TI's liability arising out of such information exceed the total purchase price of the TI part(s) at issue in this document sold by TI to Customer on an annual basis.

MECHANICAL DATA

NS (R-PDSO-G)** **PLASTIC SMALL-OUTLINE PACKAGE**

14-PINS SHOWN

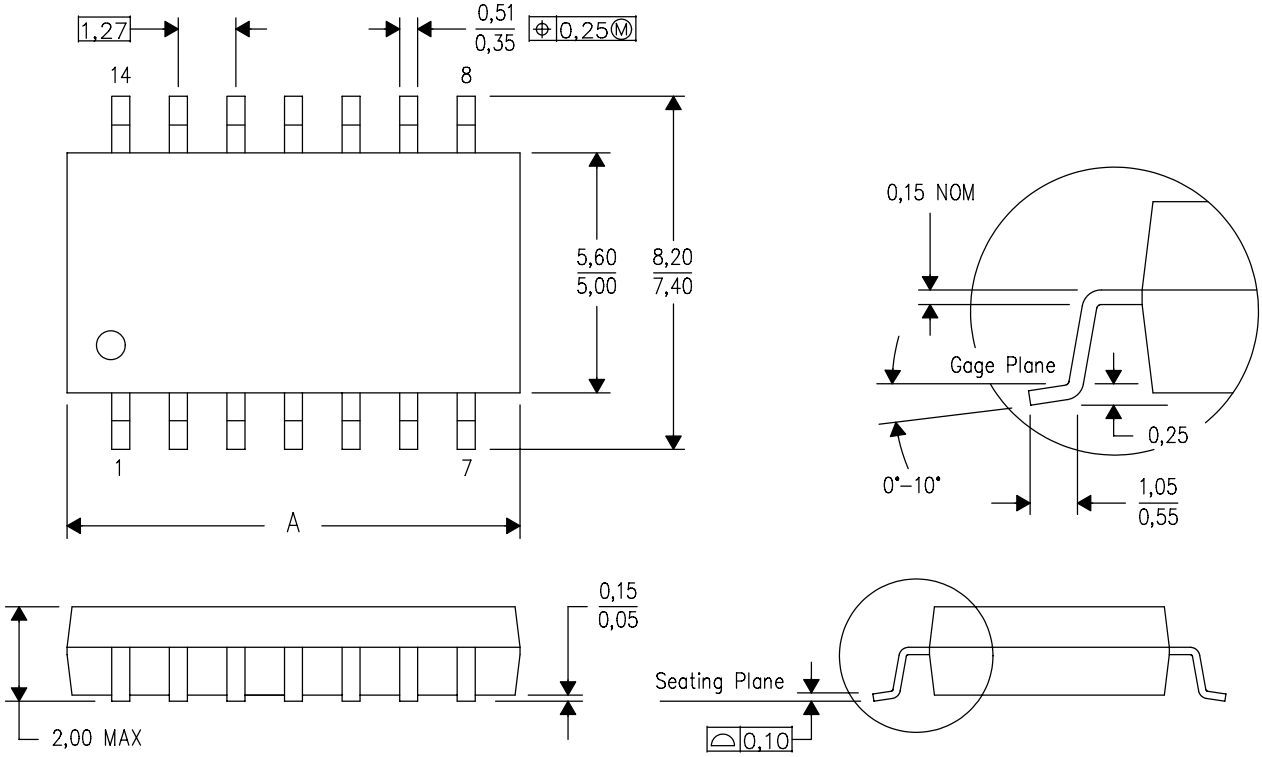

DIM \ PINS **	14	16	20	24
A MAX	10,50	10,50	12,90	15,30
A MIN	9,90	9,90	12,30	14,70

4040062/C 03/03

NOTES:
A. All linear dimensions are in millimeters.
B. This drawing is subject to change without notice.
C. Body dimensions do not include mold flash or protrusion, not to exceed 0,15.

PW (R-PDSO-G)** **PLASTIC SMALL-OUTLINE PACKAGE**

14 PINS SHOWN

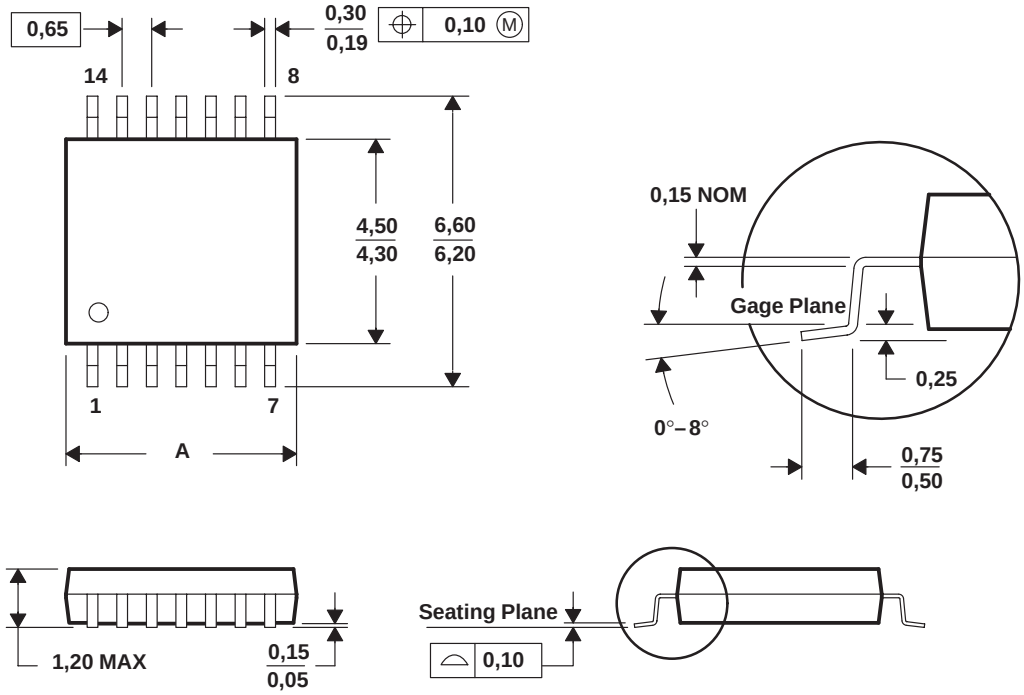

DIM \ PINS **	8	14	16	20	24	28
A MAX	3,10	5,10	5,10	6,60	7,90	9,80
A MIN	2,90	4,90	4,90	6,40	7,70	9,60

4040064/F 01/97

NOTES: A. All linear dimensions are in millimeters.
B. This drawing is subject to change without notice.
C. Body dimensions do not include mold flash or protrusion not to exceed 0,15.
D. Falls within JEDEC MO-153

IMPORTANT NOTICE

Texas Instruments Incorporated and its subsidiaries (TI) reserve the right to make corrections, modifications, enhancements, improvements, and other changes to its products and services at any time and to discontinue any product or service without notice. Customers should obtain the latest relevant information before placing orders and should verify that such information is current and complete. All products are sold subject to TI's terms and conditions of sale supplied at the time of order acknowledgment.

TI warrants performance of its hardware products to the specifications applicable at the time of sale in accordance with TI's standard warranty. Testing and other quality control techniques are used to the extent TI deems necessary to support this warranty. Except where mandated by government requirements, testing of all parameters of each product is not necessarily performed.

TI assumes no liability for applications assistance or customer product design. Customers are responsible for their products and applications using TI components. To minimize the risks associated with customer products and applications, customers should provide adequate design and operating safeguards.

TI does not warrant or represent that any license, either express or implied, is granted under any TI patent right, copyright, mask work right, or other TI intellectual property right relating to any combination, machine, or process in which TI products or services are used. Information published by TI regarding third-party products or services does not constitute a license from TI to use such products or services or a warranty or endorsement thereof. Use of such information may require a license from a third party under the patents or other intellectual property of the third party, or a license from TI under the patents or other intellectual property of TI.

Reproduction of information in TI data books or data sheets is permissible only if reproduction is without alteration and is accompanied by all associated warranties, conditions, limitations, and notices. Reproduction of this information with alteration is an unfair and deceptive business practice. TI is not responsible or liable for such altered documentation.

Resale of TI products or services with statements different from or beyond the parameters stated by TI for that product or service voids all express and any implied warranties for the associated TI product or service and is an unfair and deceptive business practice. TI is not responsible or liable for any such statements.

Following are URLs where you can obtain information on other Texas Instruments products and application solutions:

Products		**Applications**	
Amplifiers	amplifier.ti.com	Audio	www.ti.com/audio
Data Converters	dataconverter.ti.com	Automotive	www.ti.com/automotive
DSP	dsp.ti.com	Broadband	www.ti.com/broadband
Interface	interface.ti.com	Digital Control	www.ti.com/digitalcontrol
Logic	logic.ti.com	Military	www.ti.com/military
Power Mgmt	power.ti.com	Optical Networking	www.ti.com/opticalnetwork
Microcontrollers	microcontroller.ti.com	Security	www.ti.com/security
		Telephony	www.ti.com/telephony
		Video & Imaging	www.ti.com/video
		Wireless	www.ti.com/wireless

Mailing Address: Texas Instruments
Post Office Box 655303 Dallas, Texas 75265

Copyright © 2005, Texas Instruments Incorporated

This datasheet has been download from:

www.datasheetcatalog.com

Datasheets for electronics components.